	DCEC CUMMINS ENGINE Co.,LTD Generator Engine Performance Data	Engine Model **QSZ13-G3**	Curve Number FR20322	CPL Code 3690

Compression Ratio: 17:1
Cylinders: 6
Bore: 130 mm
Stroke: 163 mm
Displacement: 13.0 L

Engine Configuration: D0C3004GX03
Fuel System: HPCR
Aspiration: Turbocharged & Charge Air Cooled
Governor Regulation: ≤1%
Emission Certification: MEP STAGE II

Engine Ratings*:

Engine Speed	Standby Power		Prime Power		Continuous Power	
r/min	bhp	kWm	bhp	kWm	bhp	kWm
1500	629	470	603	450	529	395
1800	670	500	603	450	529	395

* All ratings refer to AEB26.02.

Engine Fuel Consumption @1500 r/min						
OUTPUT POWER			FUEL CONSUMPTION			
%	bhp	kWm	lb/bhp.h	g/kWm.h	gal/h	l/h
Standby Power						
100	629	470	0.317	193	400	105.5
Prime Power						
100	603	450	0.317	193	383	101.0
75	452	338	0.311	189	281	74.2
50	301	225	0.308	187	185	48.9
25	151	113	0.327	199	99	26.0
Continuous Power						
100	529	395	0.314	191	332	87.7

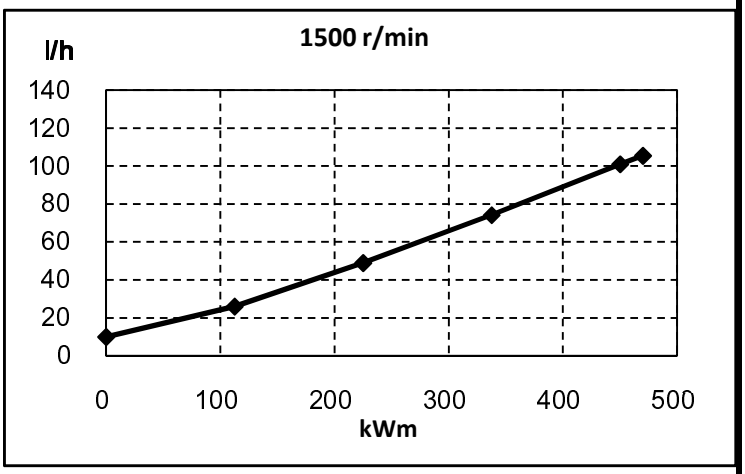

Engine Fuel Consumption @1800 r/min						
OUTPUT POWER			FUEL CONSUMPTION			
%	bhp	kWm	lb/bhp.h	g/kWm.h	gal/h	l/h
Standby Power						
100	670	500	0.336	204	450	118.6
Prime Power						
100	603	450	0.327	199	395	104.1
75	452	338	0.317	193	287	75.7
50	301	225	0.319	194	192	50.8
25	151	113	0.352	214	106	28.0
Continuous Power						
100	529	395	0.319	194	338	89.1

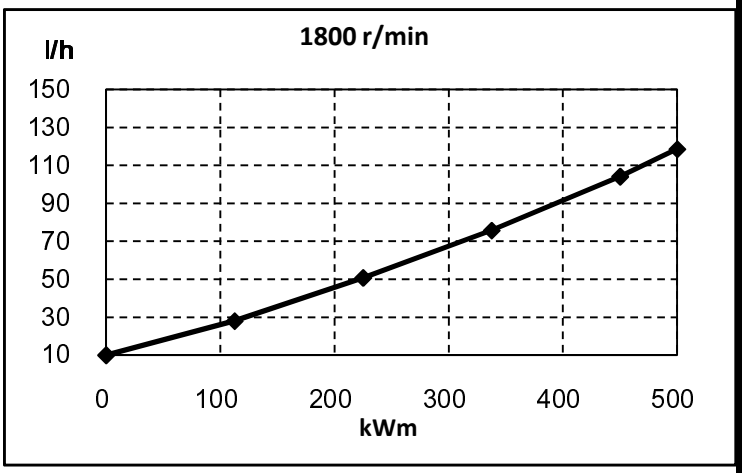

Curves shown above represent gross engine performance capabilities obtained and corrected in accordance with GB/T18297 conditions of 29.61 in Hg (100 kPa) barometric pressure [263 ft (80 m) altitude], 77 deg F (25 deg C) inlet air temperature, and 0.30 in Hg (1 kPa) water vapor pressure with No. 2 diesel fuel.

All data obtained is based on the engine operating, under the test conditions of 14.9 in H2O (3.7kPa) inlet air restriction and 2.95 in Hg (10 kPa) exhaust restriction,not included are alternator, fan, optional equipment and driven components.

The engine may be operated up to 5200 m (17,060 ft.) altitude.

	DCEC CUMMINS ENGINE Co.,LTD Generator Engine Performance Data	Engine Model	Curve Number	CPL Code
		QSZ13-G3	FR20322	3690

Power Derate Curves @1500 r/min

Standby Power

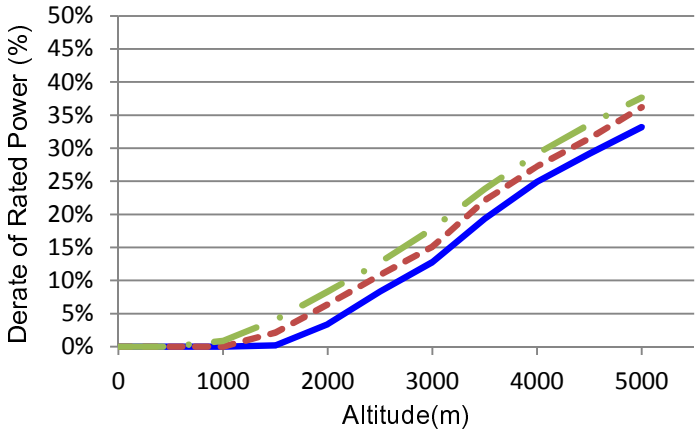

Power Derate Curves @1800 r/min

Standby Power

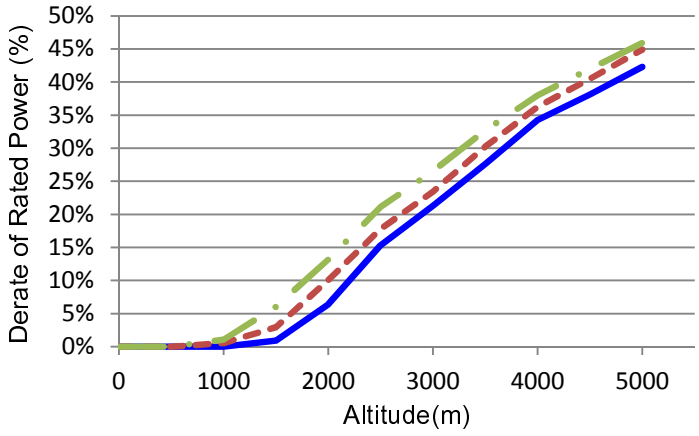

Prime Power

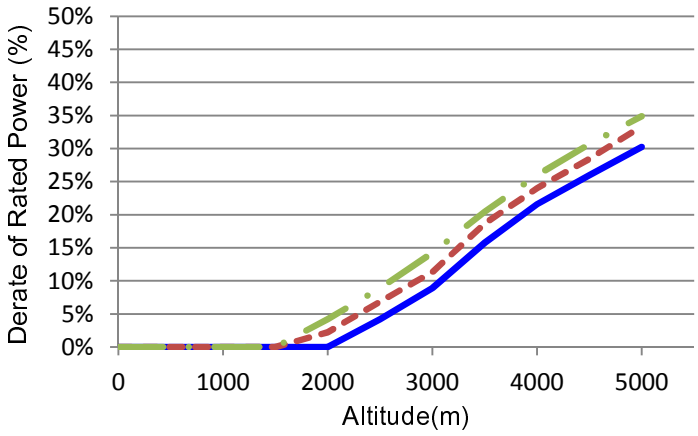

Prime Power

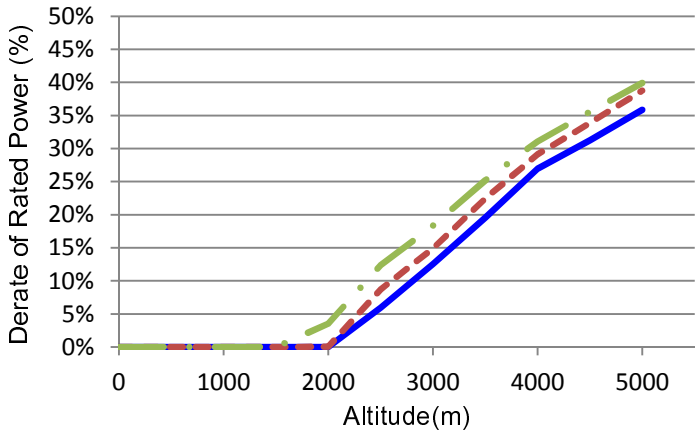

Continuous Power

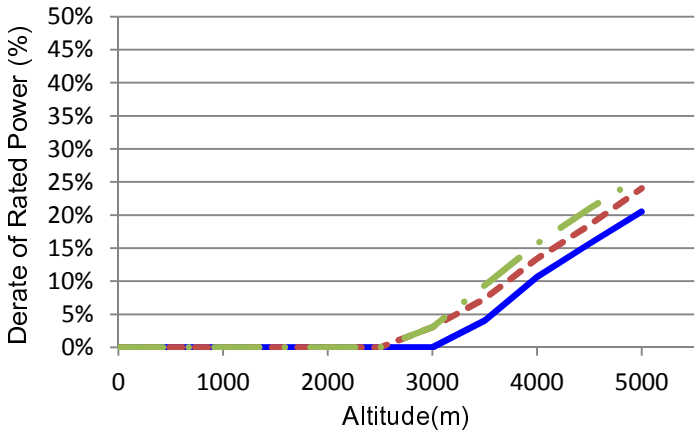

Continuous Power

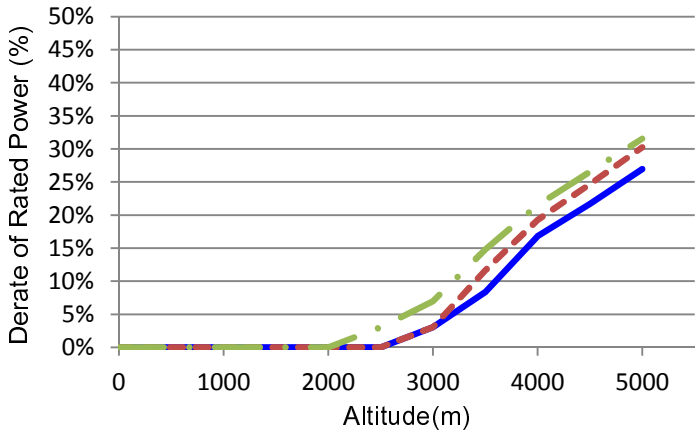

Air temperature — 25 ℃ (77℉) — 40 ℃ (104℉) — 50 ℃ (122℉)

Engine tested under the ISA conditions of 50 deg C charge temperature, 3.7kPa inlet air restriction and 10 kPa exhaust restriction.

	DCEC CUMMINS ENGINE Co.,LTD Generator Engine Performance Data	Engine Model **QSZ13-G3**	Curve Number FR20322	CPL Code 3690

GENERAL ENGINE DATA

Type:		Four cycle; Inline; 6 Cylinder
Aspiration:		Turbocharged Charge Air Cooled
Compression Ratio:		17:1
Fire Order:		1-5-3-6-2-4
Bore x Stroke:	- mm	130 x 163
Displacement:	- L	13.0
Low Idle Speed:	- r/min	700
Maximum altitude for continuous operation:	- m	5200
Approximate Engine Weight - Dry:	- kg	1245
Approximate Engine Weight - Wet:	- kg	1310
Center of Gravity from front face of block:	- mm	519
Center of Gravity above crankshaft centerline:	- mm	201
Rotation inertia of Complete Engine (without flywheel):	- $kg.m^2$	1.48

ENGINE MOUNTING

Maximum static mounting surface bending moment		
Rear face of block:	- N.m	1356
Maximum static bending moment of FAN:	- N.m	21
Maximum allowable weight on Engine Support:	- kg	1500

AIR INDUCTION SYSTEM

Whole air intake pipe size (recommendatory):	- mm	200
Charge air cooler pipe size normally acceptable:	- mm	110
Maximum temperature rise between ambient air and engine air inlet:	- ℃	11.1
Maximum Temp. Rise Between Engine Air Intake and Intake Manifold:	- ℃	30
Maximum Intake Manifold Temperature (unable to result in power loss at sea level):	- ℃	60*
Maximum Intake Manifold Temperature for Engine Protection:	- ℃	85
Maximum intake air restriction (heavy duty air cleaner):		
clean filter:	- kPa	3.2
dirty filter:	- kPa	6.2
Maximum allowable pressure drop across charge air cooler and OEM CAC piping (CACDP):	- kPa	13

EXHAUST SYSTEM

Max. back pressure imposed by complete exhaust system:	- kPa	13
Maximum allowable static bending moment at exhaust outlet flange:	- N.m	27
Exhaust pipe size normally acceptable:	- mm	130

*When excess the temperature.the durablity/reliability/performance of the engine maybe impaired.

LUBRICATION SYSTEM

Oil pressure @ idle - minimum:	kPa	82.7
Typical oil pressure range - warm engine:	kPa	207 - 276
Total system capacity (standard pan):	L	45.42
Maximum lube oil flow to all accessories:	L/min	7.57

COOLING SYSTEM

Coolant Capacity (Engine Only):	L	23.1
Engine coolant circuit thermostat opening temperature:	℃	82
Engine coolant circuit thermostat fully open temperature:	℃	94
Maximum coolant temperature - engine out:	℃	102
Minimum operating block coolant temperature:	℃	71
Maximum coolant temperature for engine protection controls:	℃	107
Maximum coolant pressure(exclusive of pressure cap; closed thermostat at maximum no load speed):	kPa	407
Minimum pressure cap rating at sea level:	kPa	103
Maximum Coolant Friction Head External to Engine:	kPa	75
Maximum deaeration time:	min	25
Minimum fill rate (low level alarm required for most engines):	L/min	19
Maximum coolant expansion space (% total system capacity):	%	10
Minimum coolant expansion space (% total system capacity):	%	6

FUEL SYSTEM

Maximum allowable restriction @ OEM point with maximum fuel flow:	kPa	13.5
Maximum fuel drain restriction (total head) before (or without) check valve:	kPa	27
Minimum fuel tank venting requirement:	L/s	0.2
Maximum fuel inlet temperature:	℃	71
Maximum heat rejection to return fuel:	kW	5.36
Maximum design fuel flow:	kg/h	204

ELECTRICAL SYSTEM

System voltage:	V	24
Minimum battery capacity-cold soak at -18 C (0 F) or above		
Engine only cold cranking amperes:	CCA	900
Engine only reserve capacity:	min	270

COLD START CAPABILITY

Minimum ambient temperature for unaided cold start:	℃	-15
Minimum ambient temperature for aided cold start (Intake Air Heater):	℃	-30

Exhaust Emissions Data

Gaseous Emissions per GB 20891-2007：		1500 r/min	1800 r/min
- Weight-Specific Nox:	g/kW.h	5.102	5.080
- Weight-Specific HC:	g/kW.h	0.105	0.117
- Weight-Specific CO:	g/kW.h	0.400	0.483
- Weight-Specific Particulates:	g/kW.h	0.030	0.047

	DCEC CUMMINS ENGINE Co.,LTD Generator Engine Performance Data	Engine Model **QSZ13-G3**	Curve Number FR20322	CPL Code 3690

Performance Data

All data is based on: Engine operating with fuel system, water pump, lubricating oil pump and air cleaner; not included are alternator, fan, and optional equipment and driven components.

Test Condition:
- GB18297 Engine test code - Performance
- Barometric Pressure : 100 kPa (29.53 in Hg)
- Air Temperature: 25 °C (77 °F)
- Altitude: 80 m (263 ft)
- Relative Humidity: 50%

Steady State Stability Band at any constant load (+/-): 5%

		Standby Power		Prime Power	
Engine Speed	r/min	1500	1800	1500	1800
Gross Engine PowerOutput	kWm	470	500	450	450
Torque:	N.m	2992	2653	2865	2388
Brake Mean EffectivePressure	kPa	2892	2564	2769	2308
Piston Speed	m/s	8.15	9.78	8.15	9.78
Friction Horsepower	kW	31	45	31	45
Coolant Flow	L/min	366	438	366	438
Fuel Consumption	kg/h	90.7	102.0	86.9	89.6
Engine Data					
Intake Air Flow	m^3/min.	30.3	38.3	29.7	35.8
Exhaust Gas Temp - DryStack	℃	547	506	530	473
Exhaust Gas Flow	kg/min.	37.3	43.1	36.5	40.3
Air to Fuel ratio		23.7	26.6	24.2	28.3
Heat Rejection to Ambient	kW	76	81	73	73
Heat Rejection to JacketCoolant	kW	171	188	154	165
Heat Rejection to Exhaust	kW	406	432	389	389
Heat Rejection to Fuel*	kW	5	5	5	5
ATA CAC					
Heat Rejection to Aftercooler	kW	97	112	93	106
TurbochargerCompressor Outlet	kPa	264	267	250	245
Charge Air Flow	kg/min	36	45	35	42
TurbochargerCompressor Outlet	℃	207	213	198	198

*This is the maxiumum heat rejection, not specified to the load listed.

TBD = To Be Decided
N/A = Not Applicable

All data is subject to change without notice, sorry for inform.

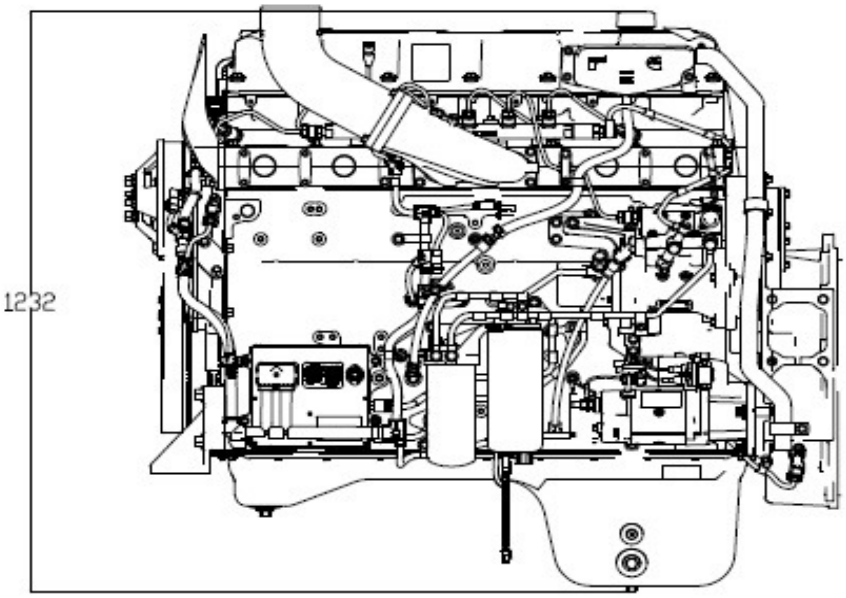
1232

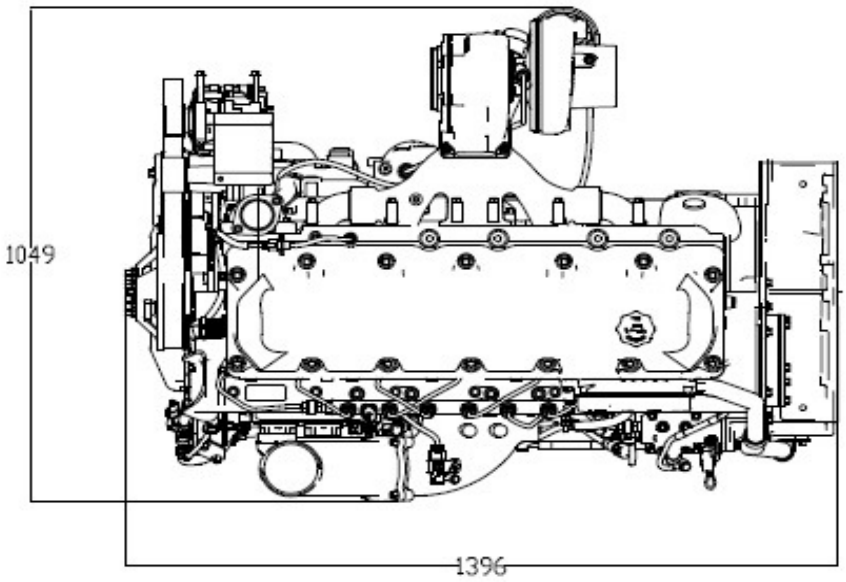
1049
1396

STANDBY POWER RATING is applicable for supplying emergency power for the duration of the utility power outage. No overload capability is available for this rating. Under no condition is an engine allowed to operate in parallel with the public utility at the Standby Power rating.

This rating should be applied where reliable utility power is available. A standby rated engine should be sized for a maximum of an 80% average load factor and 200 hours of operation per year. This includes less than 25 hours per year at the Standby Power rating. Standby ratings should never be applied except in true emergency power outages. Negotiated power outages contracted with a utility company are not considered an emergency.

CONTINUOUS POWER RATING is applicable for supplying utility power at a constant 100% load for an unlimited number of hours per year. No overload capability is available for this rating.

PRIME POWER RATING is applicable for supplying electric power in lieu of commercially purchased power. Prime Power applications must be in the form of one of the following two categories:

UNLIMITED TIME RUNNING PRIME POWER

Prime Power is available for an unlimited number of hours per year in a variable load application. Variable load should not exceed a 70% average of the Prime Power rating during any operating period of 250 hours.

The total operating time at 100% Prime Power shall not exceed 500 hours per year.

A 10% overload capability is available for a period of 1 hour within a 12 hour period of operation. Total operating time at the 10% overload power shall not exceed 25 hours per year.

LIMITED TIME RUNNING PRIME POWER

Prime Power is available for a limited number of hours in a non-variable load application. It is intended for use in situations where power outages are contracted, such as in utility power curtailment. Engines may be operated in parallel to the public utility up to 750 hours per year at power levels never to exceed the Prime Power rating. The customer should be aware, however, that the life of any engine will be reduced by this constant high load operation. Any operation exceeding 750 hours per year at the Prime Power rating should use the Continuous Power rating.

End