KTA50-G8

S P E C I F I C A T I O N S

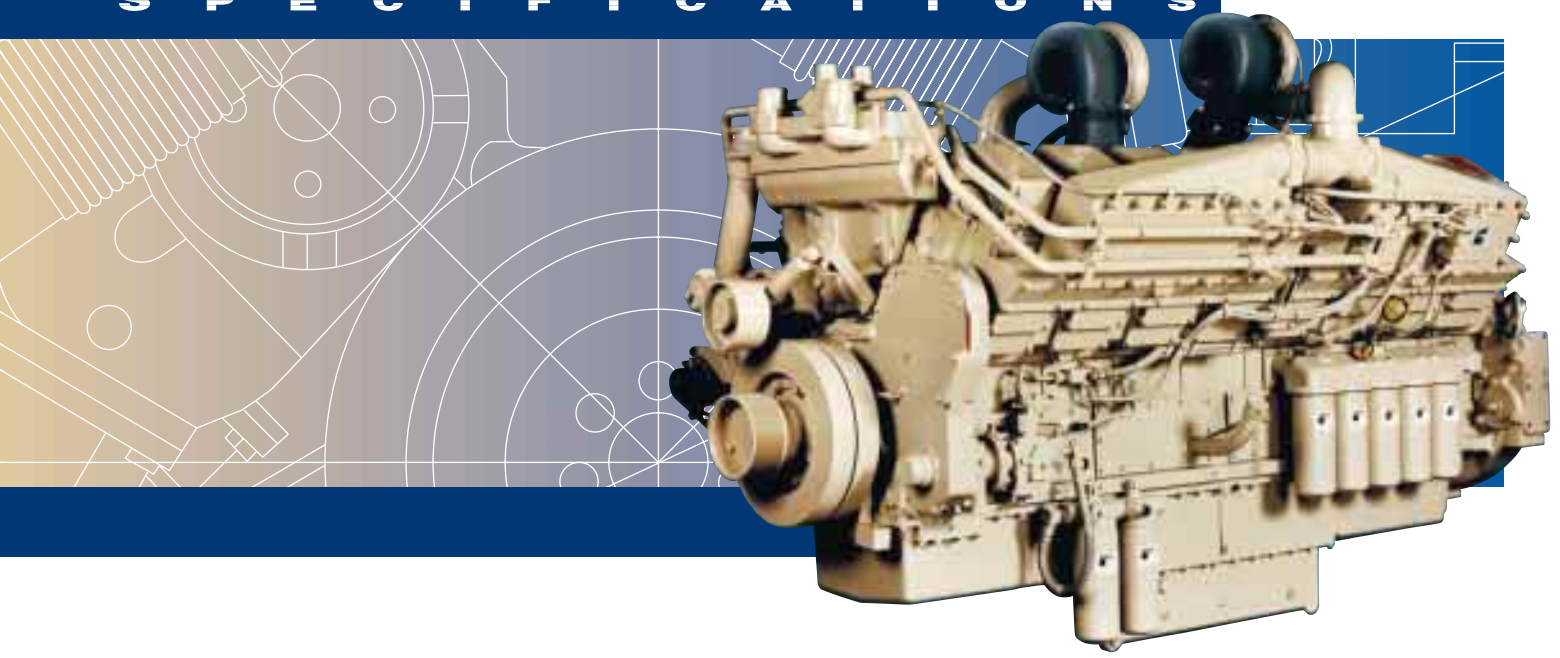

KTA50-G8 **CPL: 2354** **Curve: FR-6243**

Fuel Consumption

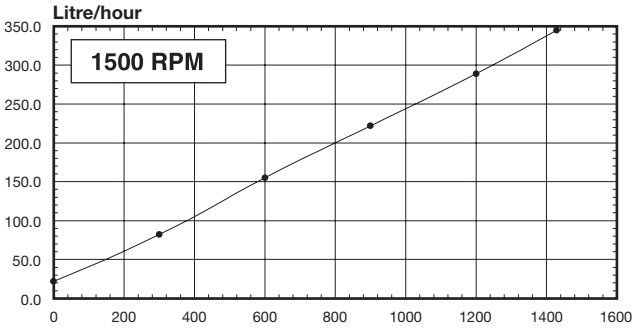

Gross Engine Power Output - kWm

(U.S. Gal = Litres x 0.2642)
(BHP = kWm x 1. 34)

SPECIFICATIONS

4-Stroke Cycle, Turbocharged & Low Temperature Aftercooled, V-16 Cylinder Diesel Engine

1500 RPM Engine Output		
Standby Power Rating	**1429 kWm***	**[1915 BHP]**
Prime Power Rating	**1200 kWm***	**[1608 BHP]**
Continuous Power Rating	**1100 kWm***	**[1475 BHP]**

* Refers to gross power available from engine, not generator set.

General Engine Data:		
Bore and Stroke	159x159 mm	[6.25x6.25 in.]
Displacement	50.3 L	[3067 cu. in.]
**Lube System Oil Capacity	204 L	[54 U.S. gal.]
Coolant Capacity	165 L	[43.5 U.S. gal.]
Net Weight with Standard Accessories, Dry	5360 kg	[11,820 lb.]

**With Oil Pan Option (OP6027) and Including Bypass Filter.

Approx. Overall Dimensions:		
Width	1415 mm	[55.7 in.]
Length (Fan Hub to Flywheel)	2857 mm	[112.5 in.]
Height	1767 mm	[69.5 in.]

PERFORMANCE:

Standard Conditions:

Data Shown Above Are Based On:

- Engine operating with fuel system, water pump, lubricating oil pump, air cleaner and exhaust silencer; not included are battery charging alternator, fan and optional driven components.
- Engine operating with diesel fuel corresponding to grade No. 2D per ASTM D975.
- ISO-3046, Part 1, Standard Reference Conditions of: 29.53 in. Hg. [100 kPa] barometric pressure (361 ft. [110 m] altitude), 77 °F [25 °C] air temperature and a relative humidity of 30%.

NOTES:

- Cummins Engine Company recommends that Cummins engines be operated at a minimum load of 30% of their respective Standby Power rating.

RATING GUIDELINES:

Based on ISO8528 and defined in Cummins Power Rating Application Guidelines. Ref: AEB 26.02.

OPERATION at ELEVATED TEMPERATURE and ALTITUDE:

The engine may be operated at Prime Power:

- Standby Power:
  3000 ft. (915 m) and 104 °F [40 °C] without power deration.
- Prime Power:
  3900 ft. (1190 m) and 104 °F [40 °C] without power deration.

For sustained operation above these conditions derate by:
4% per 1,000 ft. [300 m] and 3% per 10 °F [6% per 11 °C].

KTA50-G8

S P E C I F I C A T I O N S

Design Features:

Aftercooler

Large capacity integral aftercoolers are supplied with cooling water separate from the engine jacket. This provides cooler, denser intake air for more complete combustion and reduced engine stresses for longer life and low exhaust emissions.

Cooling System

A one pump, two loop system must be employed; i.e. the engine jacket is cooled by one radiator or heat exchanger and the aftercoolers are cooled by a separate radiator or heat exchanger. Both cooling systems utilize one water pump. The water pump is supplied engine mounted from the rear of the gear cover. Cummins provides conventional water inlet and outlet connections for both systems.

Lubrication

Large capacity integral gear driven pump provides pressure lubrication to all bearings and provides supply for piston cooling. Cummins supplied large capacity oil pans are recommended for Prime and Continuous Power applications.

Pistons

Pistons are dual Ni-resist, aluminum alloy, ground and shaped to compensate for thermal expansion which assures a precise fit at all normal operating temperatures. Oil cooled for rapid heat dissipation. Two compression rings and one oil ring.

Optional Equipment:

- Fan Drives
- Positive Head Fuel Transfer System
- Cummins Branded Electric Starters and Alternators
- Electric Fuel Control Governing System "CE" Compliant
- Duplex Changeover Oil and Fuel Filter Heads
- Engine Mounted Air Cleaners
- SAE "0" and "00" Flywheel and Flywheel Housings
- Large Capacity Oil Pans

Please contact your local Cummins representative for additional information regarding engine options.

Cummins has always been a pioneer in product improvement.
Thus, specifications may change without notice.
Illustrations may include optional equipment.

Cummins Engine Company, Inc.
Box 3005
Columbus, IN 47202-3005
U.S.A.

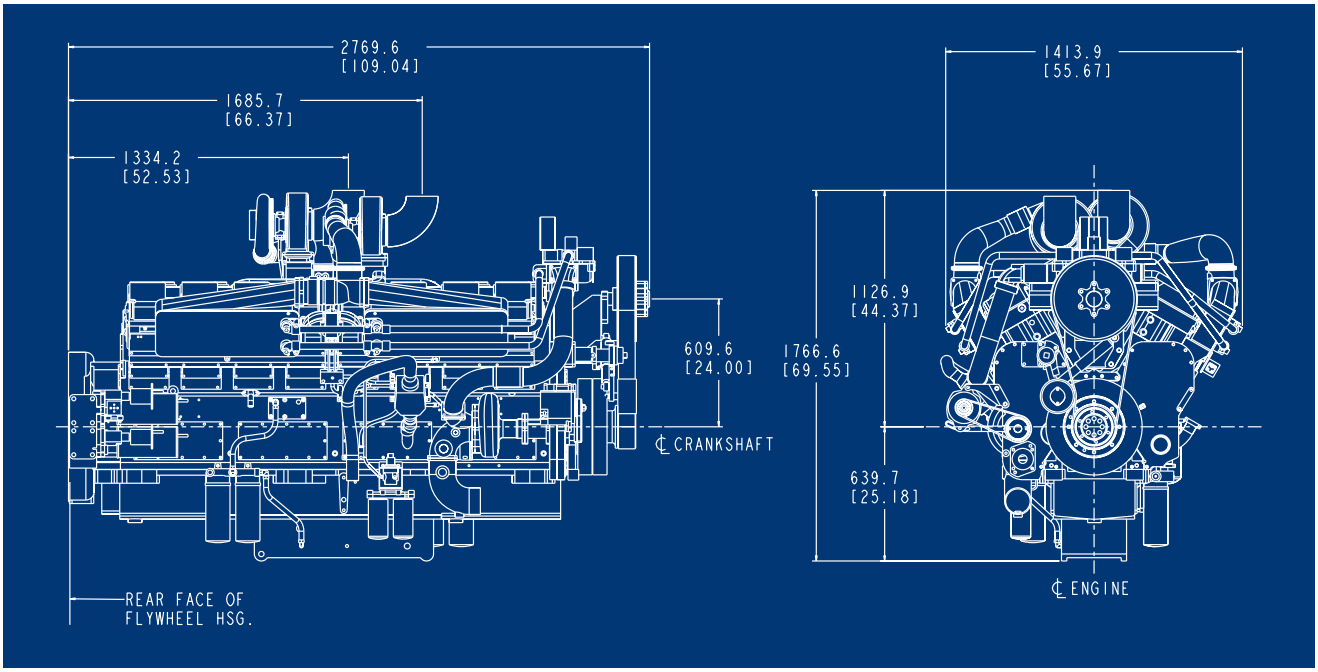

© 1998 Bulletin 4000015
Printed in U.S.A. 06/98