DCEC CUMMINS ENGINE Co.,LTD Generator Engine Performance Data	Engine Model	Curve Number	CPL Code
	6ZTAA13-G3	FR20460	3715

Compression Ratio:	17:1	Engine Configuration:	D0C3006GX03
Cylinders:	6	Fuel System:	BYC PD/GAC
Bore:	130 mm	Aspiration:	Turbocharged & Charge Air Cooled
Stroke:	163 mm	Governor Regulation:	≤3%
Displacement:	13.0 L	Emission Certification:	MEP STAGE II

Engine Ratings*:

Engine Speed	Standby Power		Prime Power		Continuous Power	
r/min	bhp	kWm	bhp	kWm	bhp	kWm
1500	510	380	456	340	397	296
1800	510	380	456	340	397	296

* All ratings refer to AEB26.02.

Engine Fuel Consumption @1500 r/min						
OUTPUT POWER			FUEL CONSUMPTION			
%	bhp	kWm	lb/bhp.h	g/kWm.h	gal/h	l/h
Standby Power						
100	510	380	0.316	192	329	86.9
Prime Power						
100	456	340	0.311	189	290	76.5
75	342	255	0.306	186	214	56.5
50	228	170	0.309	188	144	38.0
25	114	85	0.340	207	79	20.9
Continuous Power						
100	397	296	0.308	187	250	65.9

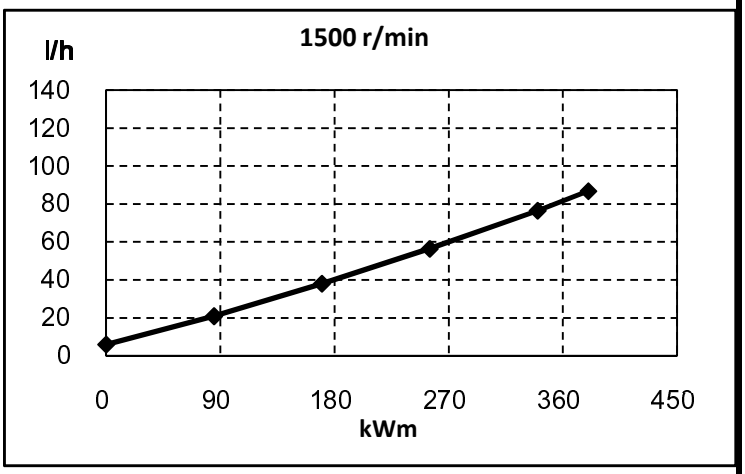

Engine Fuel Consumption @1800 r/min						
OUTPUT POWER			FUEL CONSUMPTION			
%	bhp	kWm	lb/bhp.h	g/kWm.h	gal/h	l/h
Standby Power						
100	510	380	0.336	204	350	92.3
Prime Power						
100	456	340	0.329	200	307	81.0
75	342	255	0.321	195	224	59.2
50	228	170	0.326	198	152	40.1
25	114	85	0.382	232	89	23.5
Continuous Power						
100	397	296	0.324	197	263	69.4

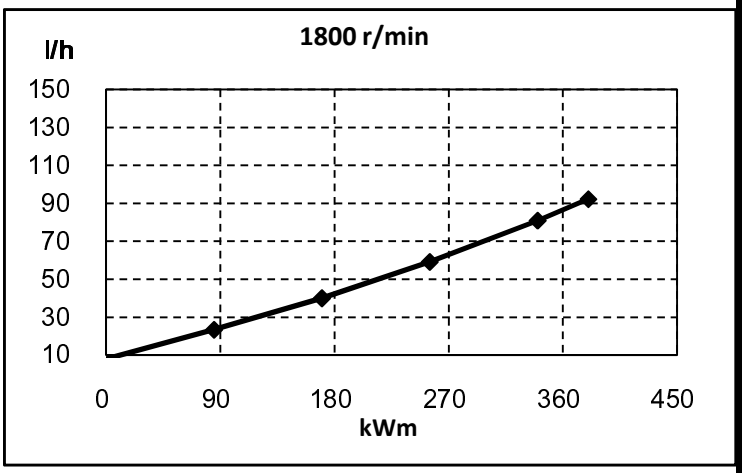

Curves shown above represent gross engine performance capabilities obtained and corrected in accordance with GB/T18297 conditions of 29.61 in Hg (100 kPa) barometric pressure [263 ft (80 m) altitude], 77 deg F (25 deg C) inlet air temperature, and 0.30 in Hg (1 kPa) water vapor pressure with No. 2 diesel fuel.

All data obtained is based on the engine operating, under the test conditions of 14.9 in H2O (3.7kPa) inlet air restriction and 2.95 in Hg (10 kPa) exhaust restriction,not included are alternator, fan, optional equipment and driven components.

The engine may be operated up to 4500 m altitude.

	DCEC CUMMINS ENGINE Co.,LTD Generator Engine Performance Data	Engine Model	Curve Number	CPL Code
		6ZTAA13-G3	FR20460	3715

Power Derate Curves @1500 r/min

Standby Power

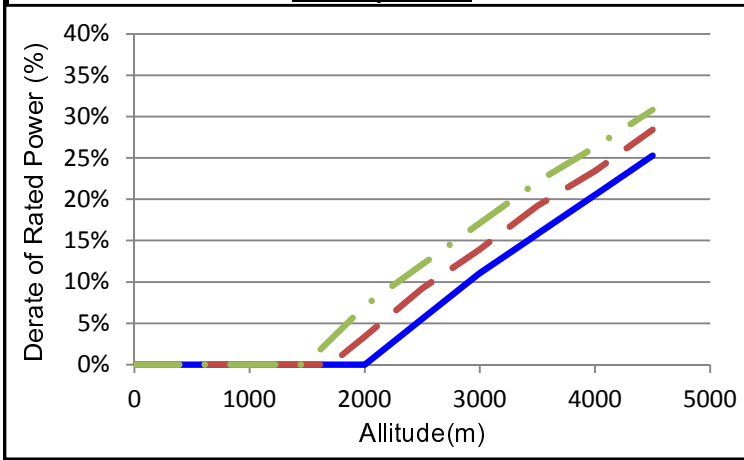

Power Derate Curves @1800 r/min

Standby Power

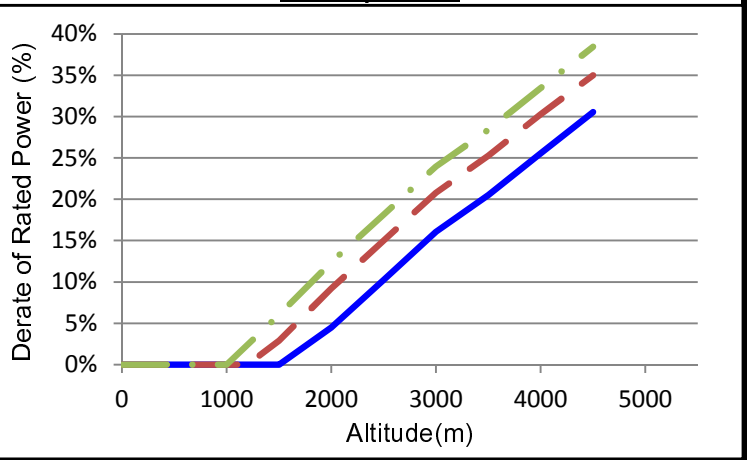

Prime Power

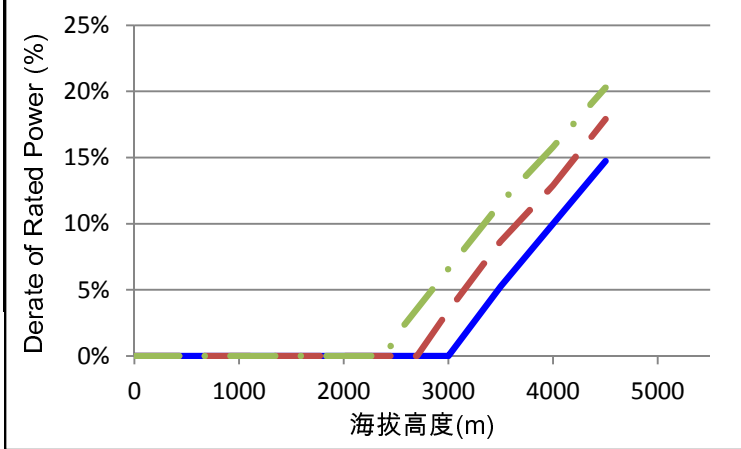

Prime Power

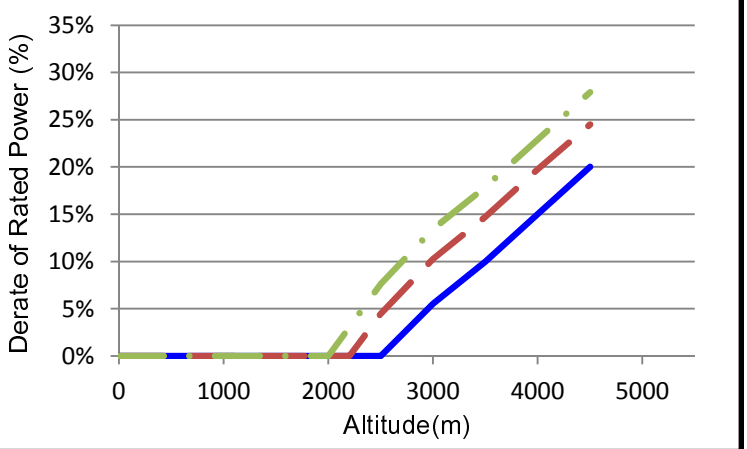

Continuous Power

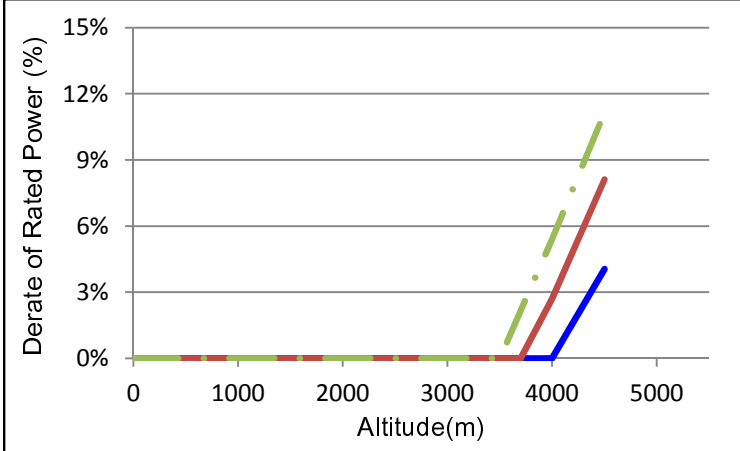

Continuous Power

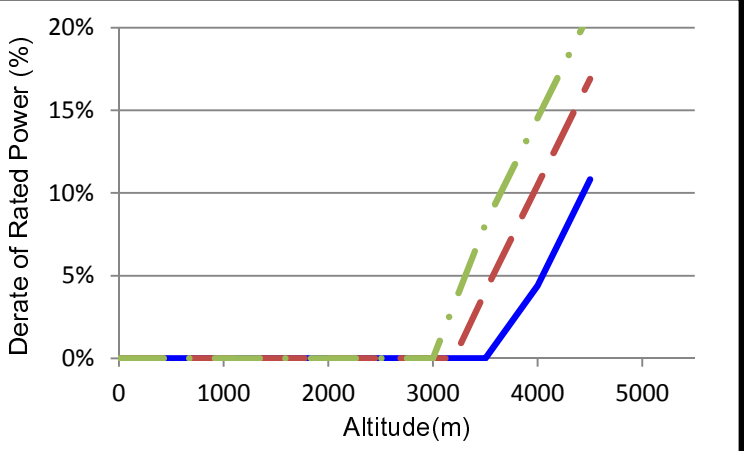

Air temperature — 25 ℃ (77°F) — 40 ℃ (104°F) — 50 ℃ (122°F)

Engine tested under the ISA conditions of 50 deg C charge temperature, 3.7kPa inlet air restriction and 10 kPa exhaust restriction.

	DCEC CUMMINS ENGINE Co.,LTD Generator Engine Performance Data	Engine Model	Curve Number	CPL Code
		6ZTAA13-G3	FR20460	3715

GENERAL ENGINE DATA

Type:		Four cycle; Inline; 6 Cylinder
Aspiration:		Turbocharged Charge Air Cooled
Compression Ratio:		17:1
Fire Order:		1-5-3-6-2-4
Bore x Stroke:	- mm	130 x 163
Displacement:	- L	13.0
Low Idle Speed:	- r/min	800 -1000
Maximum altitude for continuous operation:	- m	4500
Approximate Engine Weight - Dry:	- kg	1200
Approximate Engine Weight - Wet:	- kg	1265
Center of Gravity from front face of block:	- mm	519
Center of Gravity above crankshaft centerline:	- mm	201
Rotation inertia of Complete Engine (without flywheel):	- $kg.m^2$	1.48

ENGINE MOUNTING

Maximum static mounting surface bending moment		
Rear face of block:	- N.m	1356
Maximum static bending moment of FAN:	- N.m	21
Maximum allowable weight on Engine Support:	- kg	1500

AIR INDUCTION SYSTEM

Whole air intake pipe size (recommendatory):	- mm	200
Charge air cooler pipe size normally acceptable (recommendatory):	- mm	110
Maximum temperature rise between ambient air and engine air inlet:	- ℃	11.1
Maximum Temp. Rise Between Engine Air Intake and Intake Manifold:	- ℃	30
Maximum Intake Manifold Temperature (unable to result in power loss at sea level):	- ℃	60*
Maximum Intake Manifold Temperature:	- ℃	85
Maximum intake air restriction (heavy duty air cleaner):		
clean filter:	- kPa	3.2
dirty filter:	- kPa	6.2
Maximum allowable pressure drop across charge air cooler and OEM CAC piping (CACDP):	- kPa	13

EXHAUST SYSTEM

Max. back pressure imposed by complete exhaust system:	- kPa	13
Maximum allowable static bending moment at exhaust outlet flange:	- N.m	27
Exhaust pipe size normally acceptable (recommendatory):	- mm	130

*When excess the temperature.the durablity/reliability/performance of the engine maybe impaired.

LUBRICATION SYSTEM

Oil pressure @ idle - minimum:	kPa	82.7
Typical oil pressure range - warm engine:	kPa	207 - 276
Total system capacity (standard pan):	L	45.42
Maximum lube oil flow to all accessories:	L/min	7.57

COOLING SYSTEM

Coolant Capacity (Engine Only):	L	23.1
Engine coolant circuit thermostat opening temperature:	℃	82
Engine coolant circuit thermostat fully open temperature:	℃	94
Maximum coolant temperature - engine out:	℃	102
Minimum operating block coolant temperature:	℃	71
Maximum coolant pressure(exclusive of pressure cap; closed thermostat at maximum no load speed):	kPa	407
Minimum pressure cap rating at sea level:	kPa	103
Maximum Coolant Friction Head External to Engine:	kPa	75
Maximum deaeration time:	min	25
Minimum fill rate (low level alarm required for most engines):	L/min	19
Maximum coolant expansion space (% total system capacity):	%	10
Minimum coolant expansion space (% total system capacity):	%	6

FUEL SYSTEM

Maximum allowable restriction @ OEM point with maximum fuel flow:	kPa	20.3
Maximum fuel drain restriction (total head) before (or without) check valve:	kPa	33.9
Minimum fuel tank venting requirement:	L/s	0.2
Maximum fuel inlet temperature:	℃	71
Maximum design fuel flow:	kg/h	162

ELECTRICAL SYSTEM

System voltage:	V	24
Minimum battery capacity-cold soak at -18 C (0 F) or above		
Engine only cold cranking amperes:	CCA	900
Engine only reserve capacity:	min	270

COLD START CAPABILITY

Minimum ambient temperature for unaided cold start:	℃	-15
Minimum ambient temperature for aided cold start (Intake Air Heater):	℃	-35

Exhaust Emissions Data

Gaseous Emissions per GB 20891-2007：		1500 r/min	1800 r/min
- Weight-Specific Nox:	g/kW.h	5.520	4.750
- Weight-Specific HC:	g/kW.h	0.210	0.270
- Weight-Specific CO:	g/kW.h	0.600	0.540
- Weight-Specific Particulates:	g/kW.h	0.160	0.170

	DCEC CUMMINS ENGINE Co.,LTD Generator Engine Performance Data	Engine Model	Curve Number	CPL Code
		6ZTAA13-G3	FR20460	3715

Performance Data

All data is based on: Engine operating with fuel system, water pump, lubricating oil pump and air cleaner; not included are alternator, fan, and optional equipment and driven components.

- GB18297 Engine test code - Performance

Test Condition:

- Barometric Pressure : 100 kPa (29.53 in Hg)
- Air Temperature: 25 °C (77 °F)
- Altitude: 80 m (263 ft)
- Relative Humidity: 50%

Steady State Stability Band at any constant load (+/-): 5%

		Standby Power		Prime Power	
Engine Speed	r/min	1500	1800	1500	1800
Gross Engine PowerOutput	kWm	380	380	340	340
Torque:	N.m	2419	2016	2165	1804
Brake Mean EffectivePressure	kPa	2338	1949	2092	1744
Piston Speed	m/s	8.15	9.78	8.15	9.78
Friction Horsepower	kW	31	45	31	45
Coolant Flow	L/min	366	438	366	438
Fuel Consumption	kg/h	73.0	77.5	64.3	68.0
Engine Data					
Intake Air Flow	m3/min	27.6	31.6	25.5	30.3
Exhaust Gas Temp - DryStack	℃	636	600	594	551
Exhaust Gas Flow	kg/min.	28.8	32.9	26.6	31.5
Air to Fuel ratio		22.7	24.5	23.8	26.8
Heat Rejection to Ambient	kW	62	62	55	55
Heat Rejection to JacketCoolant	kW	152	153	140	142
Heat Rejection to Exhaust	kW	329	329	294	294
Heat Rejection to Fuel*	kW	5	5	5	5
ATA CAC					
Heat Rejection to Aftercooler	kW	79	91	65	79
TurbochargerCompressor Outlet	kPa	257	256	231	235
Charge Air Flow	kg/min.	32.6	37.3	30.1	35.8
TurbochargerCompressor Outlet	℃	195	195	179	180

*This is the maxiumum heat rejection, not specified to the load listed.

TBD = To Be Decided
N/A = Not Applicable

All data is subject to change without notice, sorry for inform.

	DCEC CUMMINS ENGINE Co.,LTD Generator Engine Performance Data	Engine Model	Curve Number	CPL Code
		6ZTAA13-G3	FR20460	3715

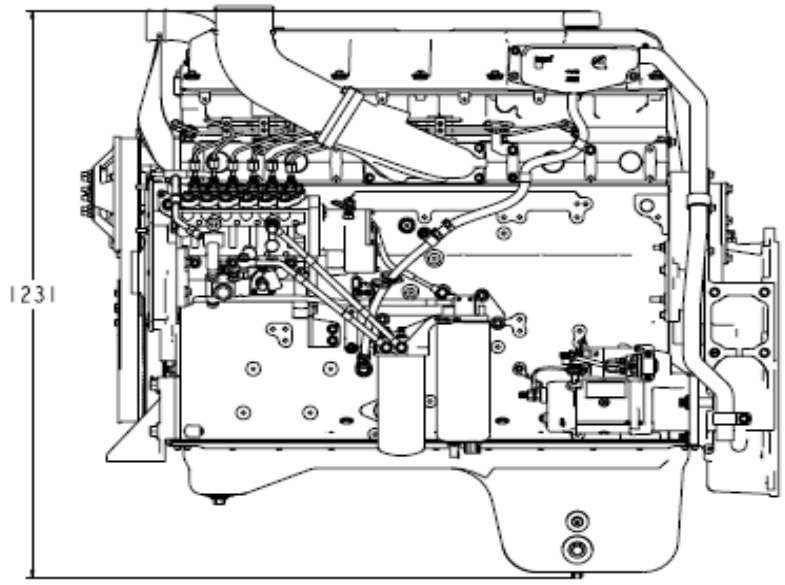

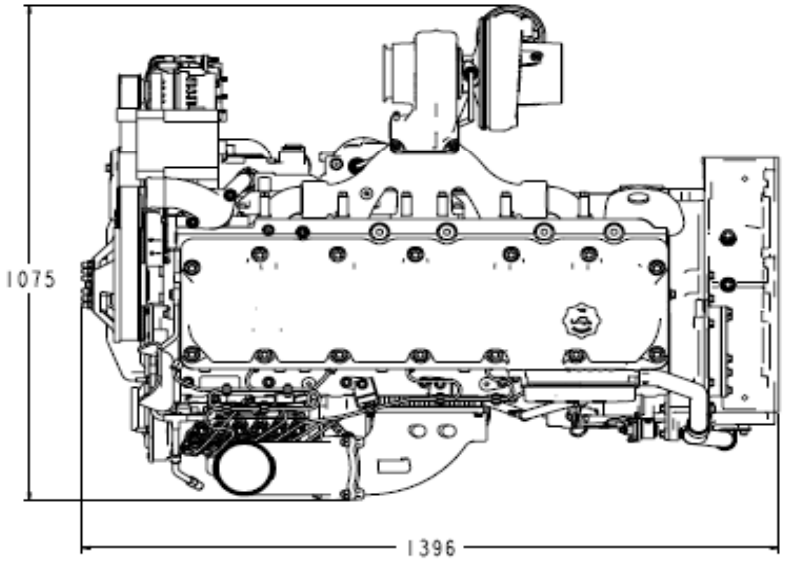

STANDBY POWER RATING is applicable for supplying emergency power for the duration of the utility power outage. No overload capability is available for this rating. Under no condition is an engine allowed to operate in parallel with the public utility at the Standby Power rating.

This rating should be applied where reliable utility power is available. A standby rated engine should be sized for a maximum of an 80% average load factor and 200 hours of operation per year. This includes less than 25 hours per year at the Standby Power rating. Standby ratings should never be applied except in true emergency power outages. Negotiated power outages contracted with a utility company are not considered an emergency.

CONTINUOUS POWER RATING is applicable for supplying utility power at a constant 100% load for an unlimited number of hours per year. No overload capability is available for this rating.

PRIME POWER RATING is applicable for supplying electric power in lieu of commercially purchased power. Prime Power applications must be in the form of one of the following two categories:

UNLIMITED TIME RUNNING PRIME POWER

Prime Power is available for an unlimited number of hours per year in a variable load application. Variable load should not exceed a 70% average of the Prime Power rating during any operating period of 250 hours.

The total operating time at 100% Prime Power shall not exceed 500 hours per year.

A 10% overload capability is available for a period of 1 hour within a 12 hour period of operation. Total operating time at the 10% overload power shall not exceed 25 hours per year.

LIMITED TIME RUNNING PRIME POWER

Prime Power is available for a limited number of hours in a non-variable load application. It is intended for use in situations where power outages are contracted, such as in utility power curtailment. Engines may be operated in parallel to the public utility up to 750 hours per year at power levels never to exceed the Prime Power rating. The customer should be aware, however, that the life of any engine will be reduced by this constant high load operation. Any operation exceeding 750 hours per year at the Prime Power rating should use the Continuous Power rating.

End